HOME | RESERVE

Laney sectional left

assembly instructions

Smooth & Wrinkle-Free Fabric Covers: In addition to these printed instructions, you may want to watch our beauty tips videos on the customer service page of our website. The videos show demonstrations on how to apply the fabric covers and make them smooth and wrinkle free.

Renewability: Individual foam and fabric parts are available. You no longer have to worry that something will happen and you'll just have to live with it. From pet attacks to paint spills, it's easy to recover from a furniture accident.

Foam: The seat cushions will feel firm at first. That's intentional, since firmer foam lasts longer. You can shorten the break-in period by putting the cushions on the floor and walking on them for a few minutes.

Fabric Exchange: To use our 30-day fabric cover exchange program, contact us and we'll lead you through the process. Keep the covers out of actual use to preserve them in new, unused, and clean condition. Fold them neatly when repackaging to avoid wrinkles.

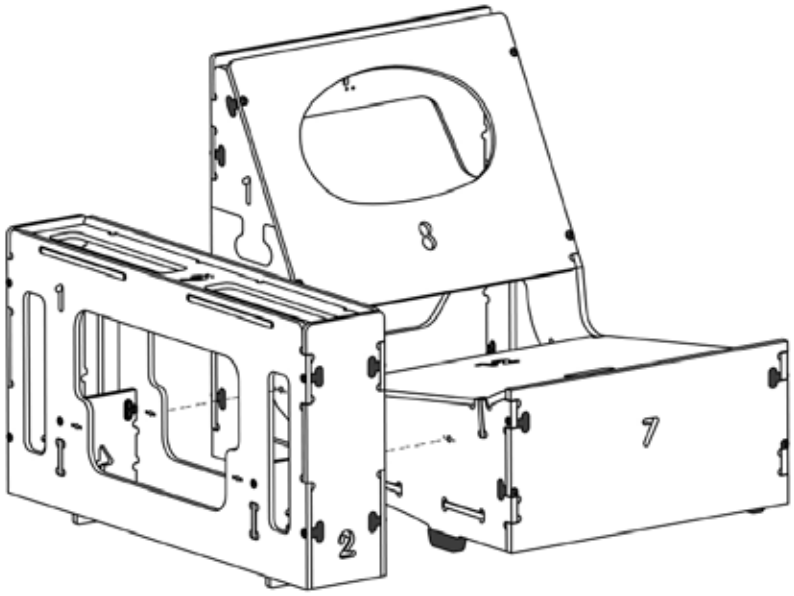

Tools: Phillips screwdriver or powered drill with a Phillips screwdriver bit.

A sanding pad is included if you wish to smooth over any of the surfaces or edges after the frame is assembled. It is not necessary to sand any of the frame parts during assembly. No glue will be used. Your furniture will be ready for use immediately.

Arm Assembly

Open the box and set aside the foam and fabric for later. Leave the wood parts in the boxes. We will take them out as needed.

1 Take wood parts 1-7 out of box 1. Open the parts bag and insert the black plastic T-connectors into the parts shown here. Throughout these instructions it is okay to use a hammer to tap the T-connectors into position.

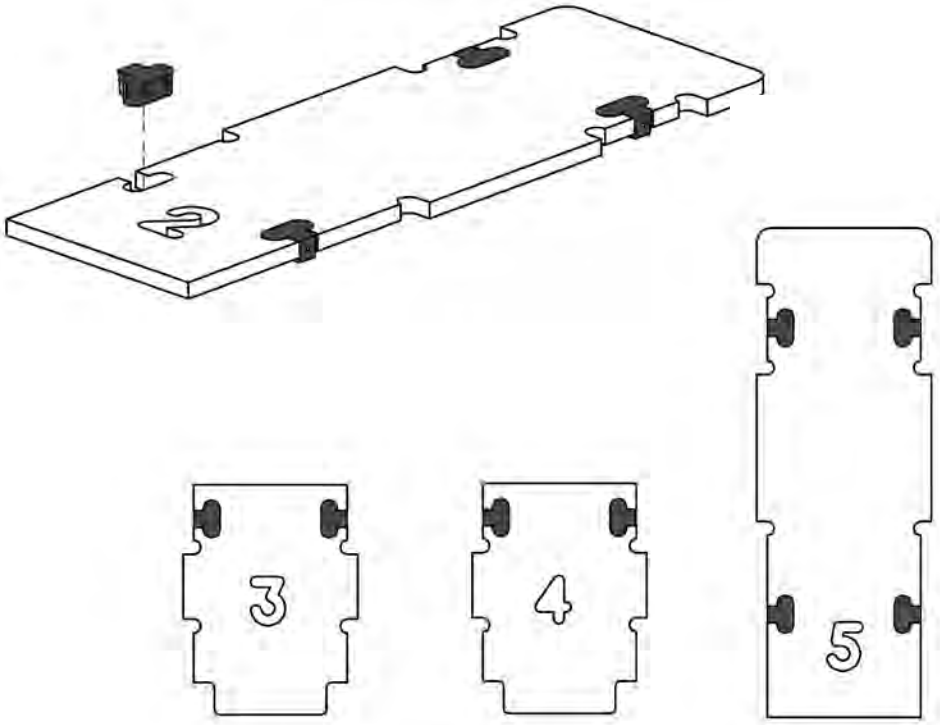

2 Connect parts 1 and 2 together and secure with two screws.

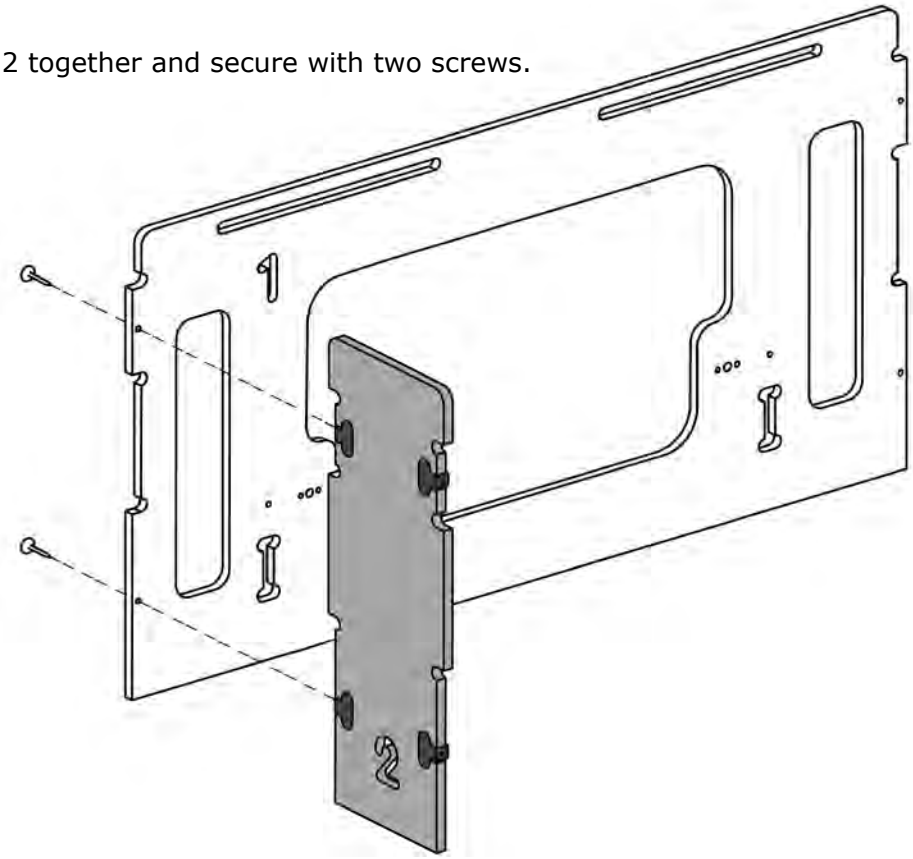

3 Place part 3 into position on part 1 and secure with a screw.

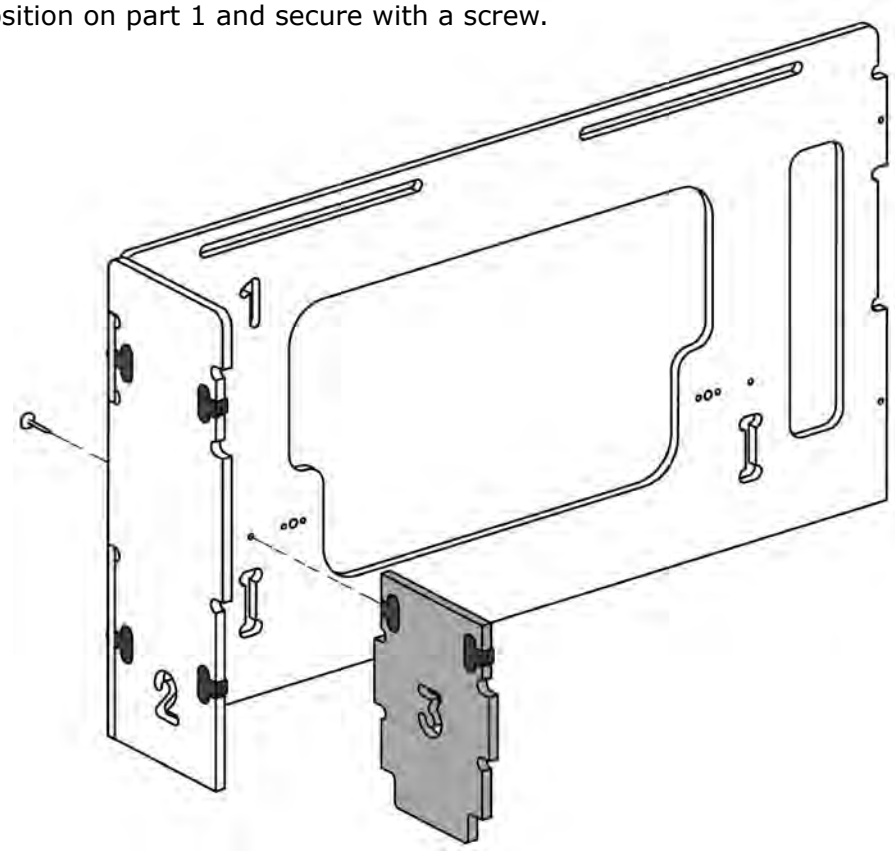

4 Place part 4 into position on part 1 and secure with a screw.

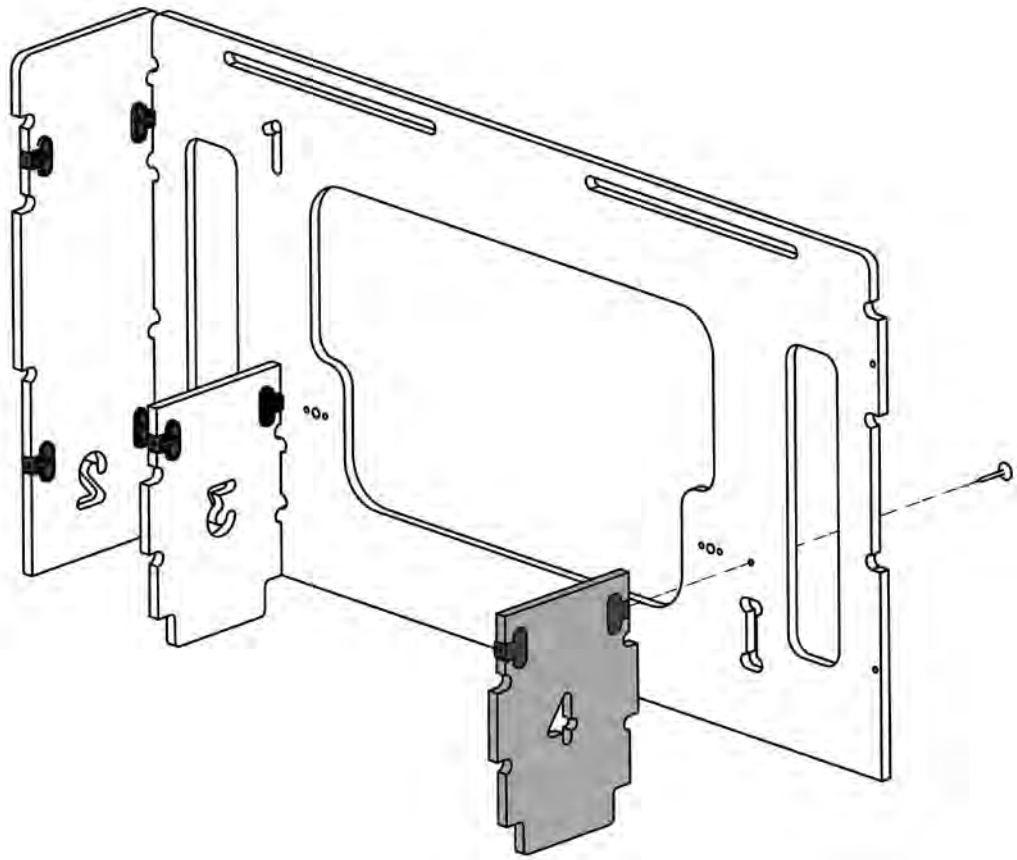

5 Connect parts 5 and 1 together and secure with two screws.

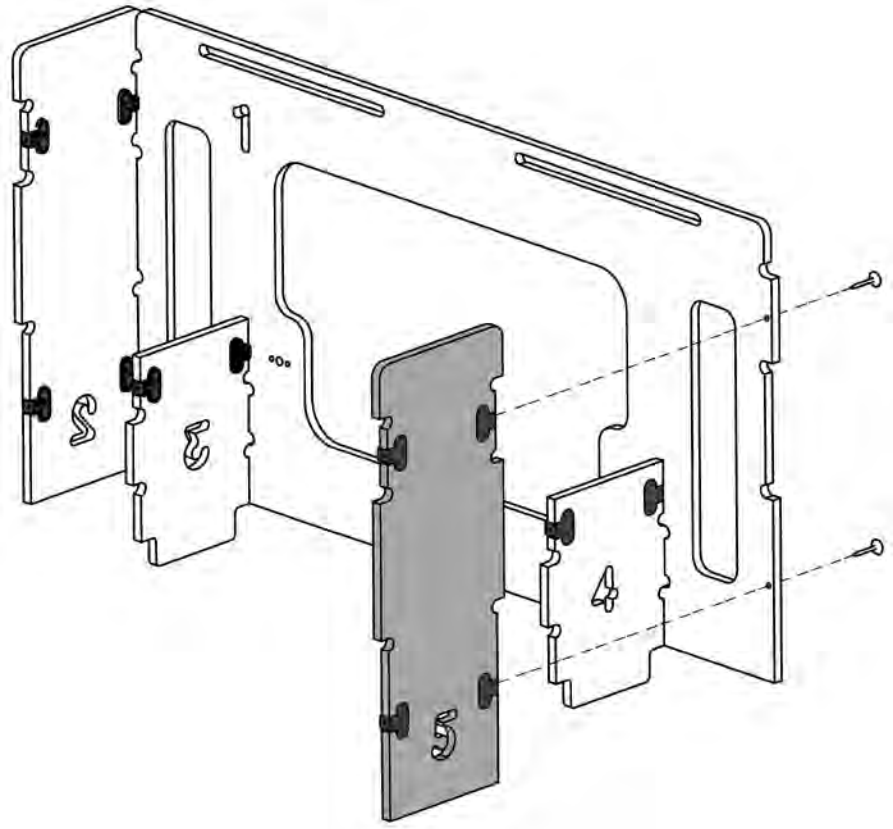

6 Place part 6 into position as shown.

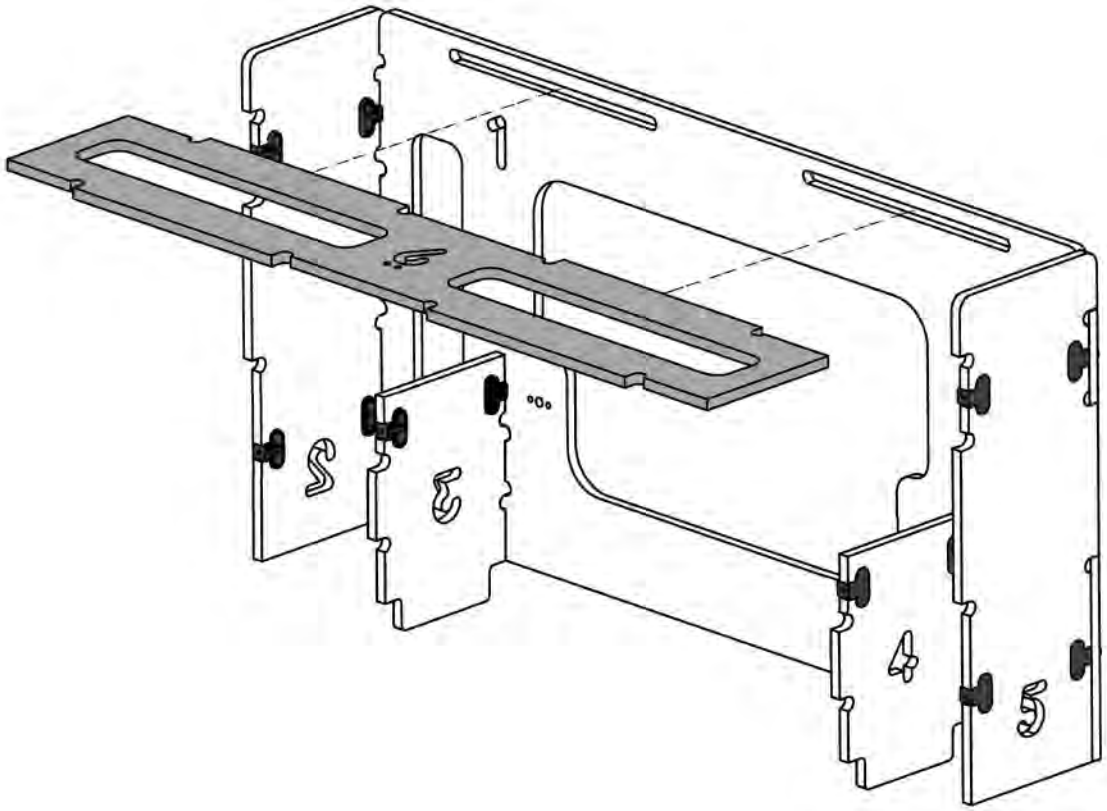

7 While holding part 6 in place, put part 7 into position on parts 2,3,4,5, and 6, then secure with six screws.

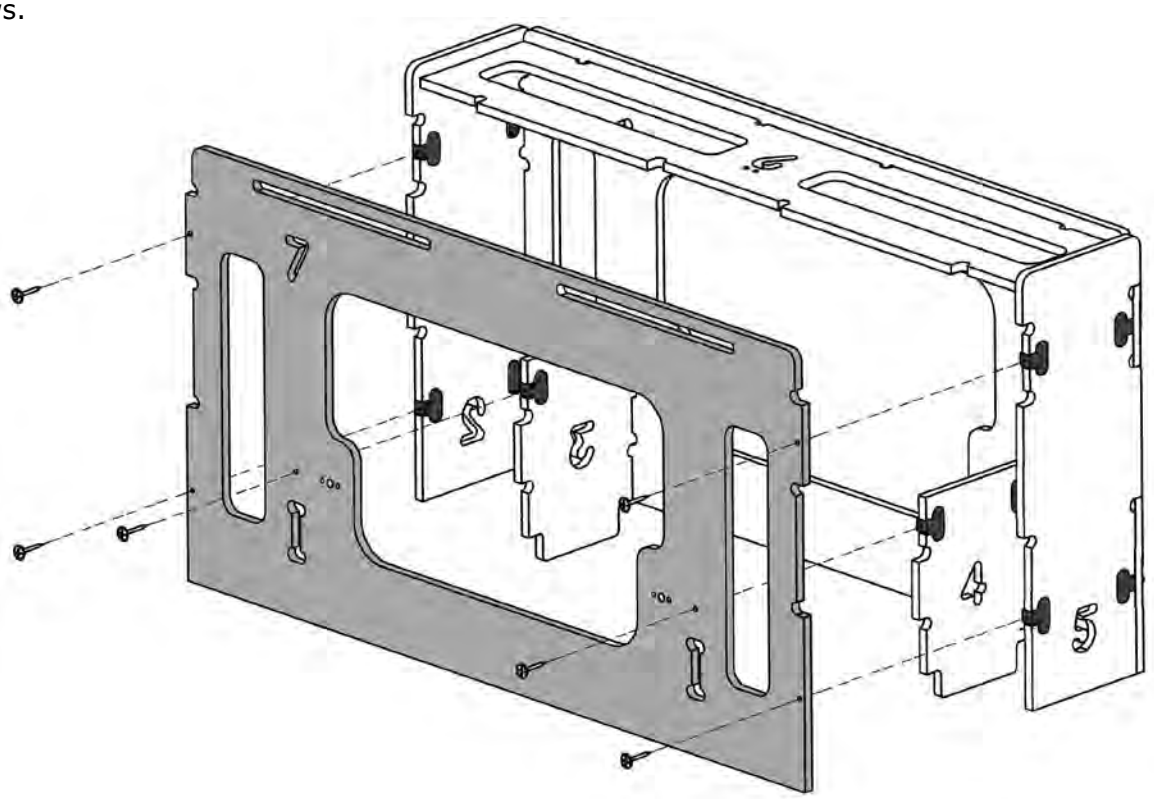

8 Repeat the assembly process for the other arm. There will be another set of wood parts numbered 1-7. Take them out of the box and follow these same steps (1-7). Set the arms aside when finished.

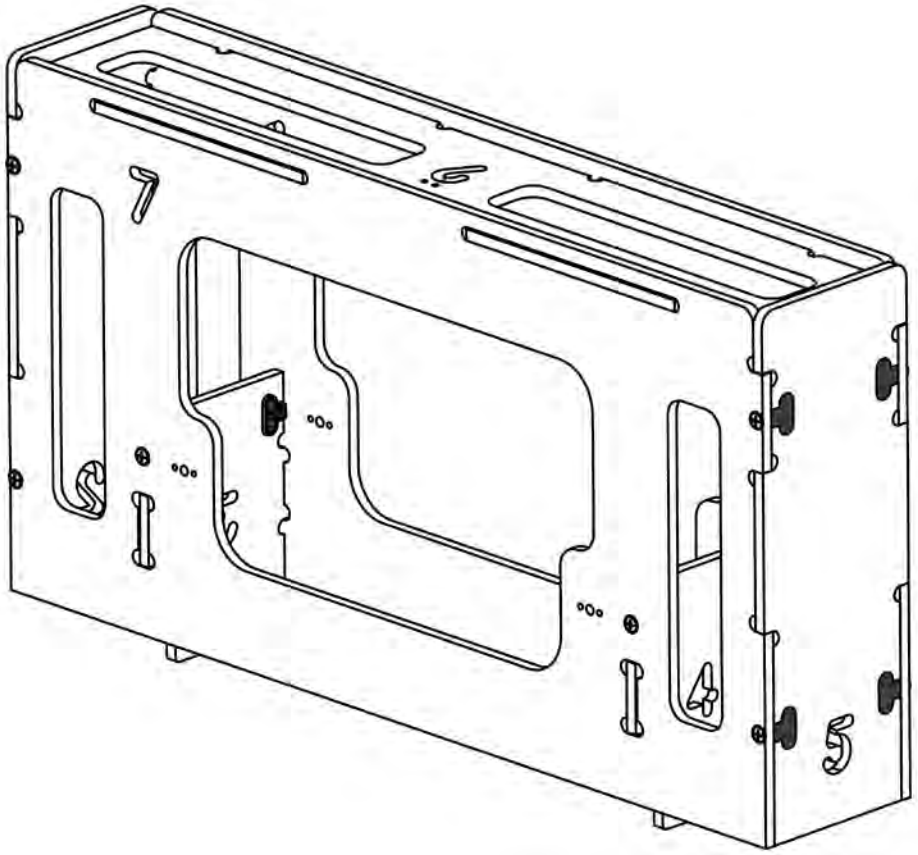

Frame Assembly

Now take all the remaining wood parts out of the box. These parts are not packed in order of assembly, so don’t worry about mixing them. They are all numbered for easy reference.

1 Insert the black plastic T-connectors into the parts shown. Throughout these instructions it’s okay to use a hammer to tap the T-connectors and wood parts into position.

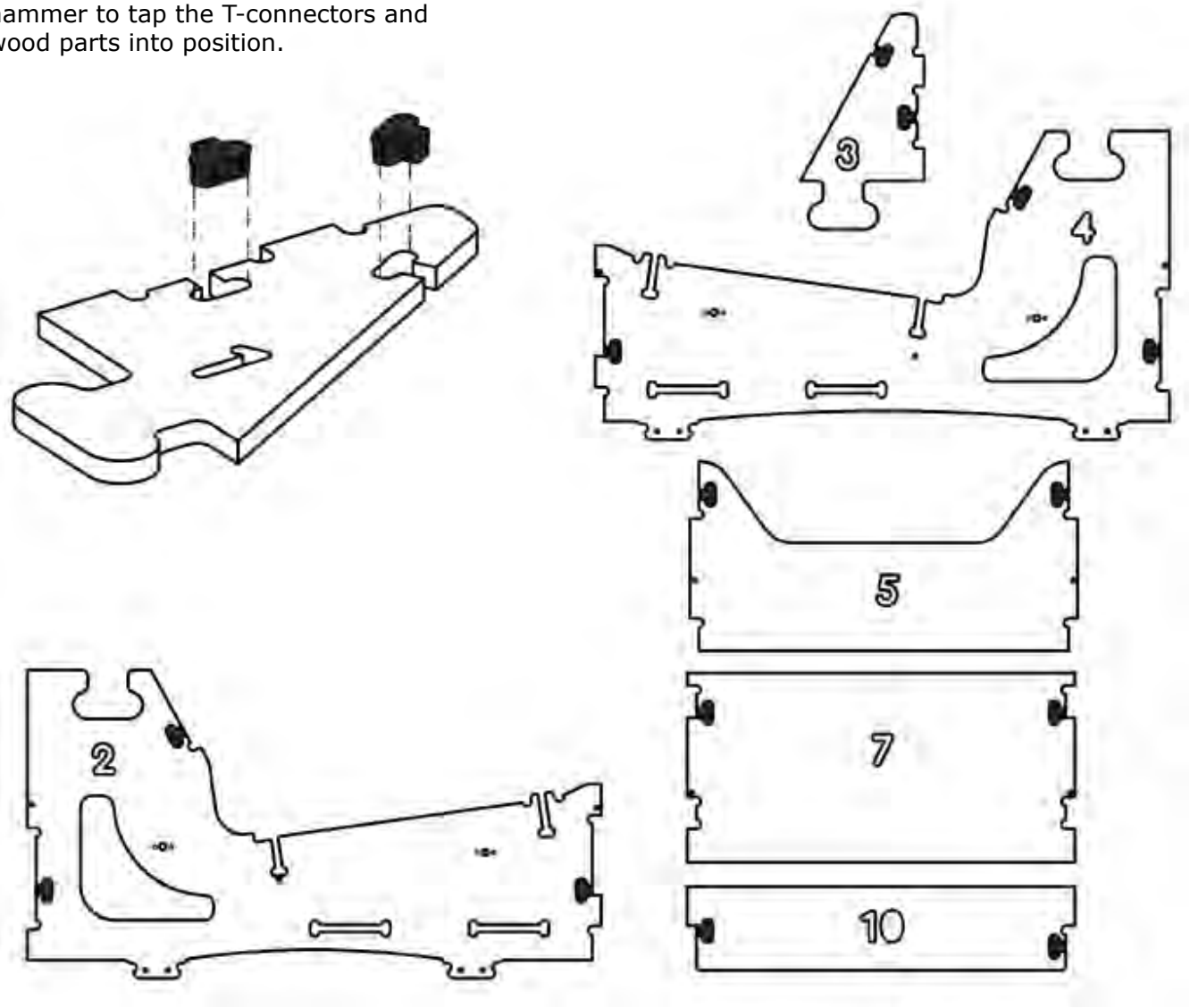

2 Attach black floor glides to the parts shown.

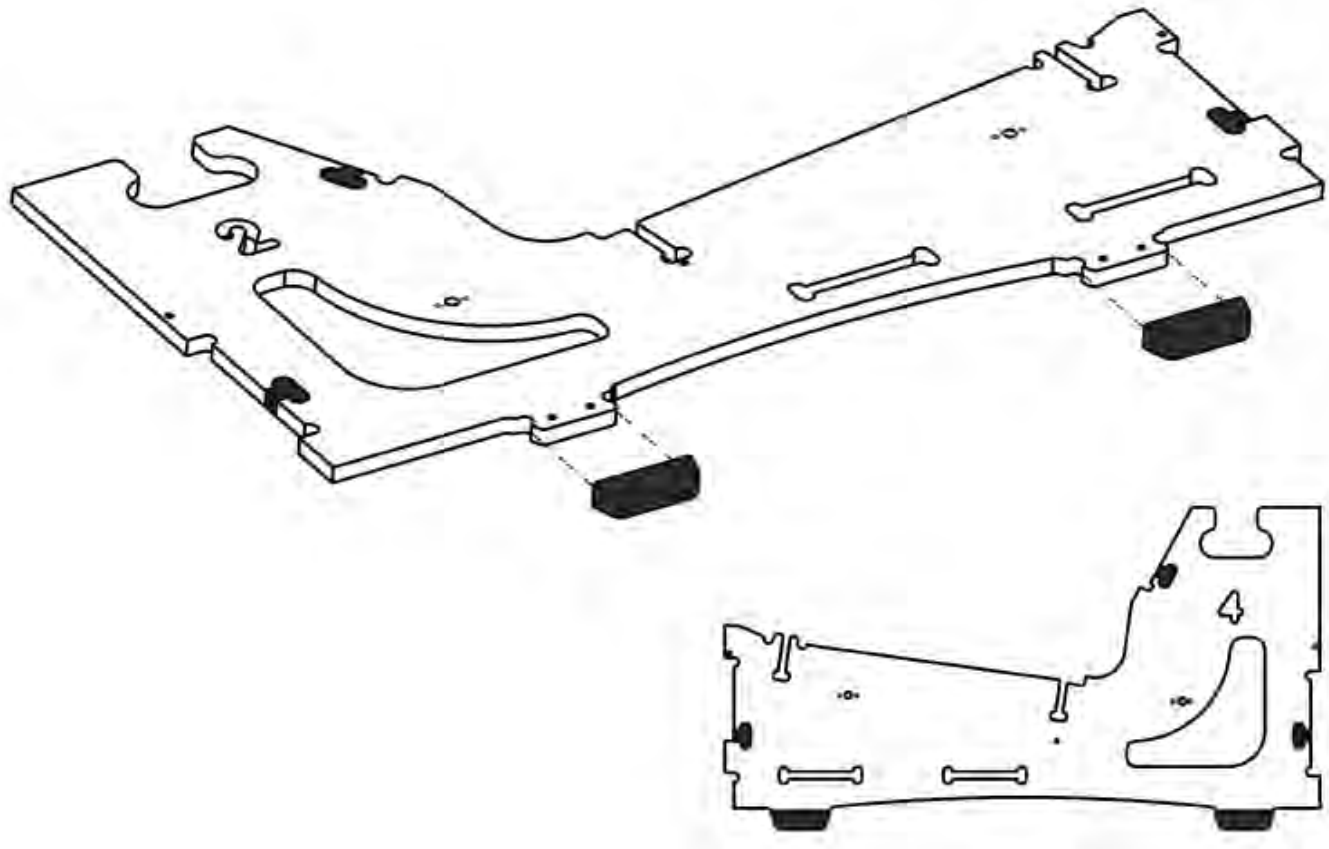

3 Connect parts 1 and 2 together. Repeat for parts 3 and 4.

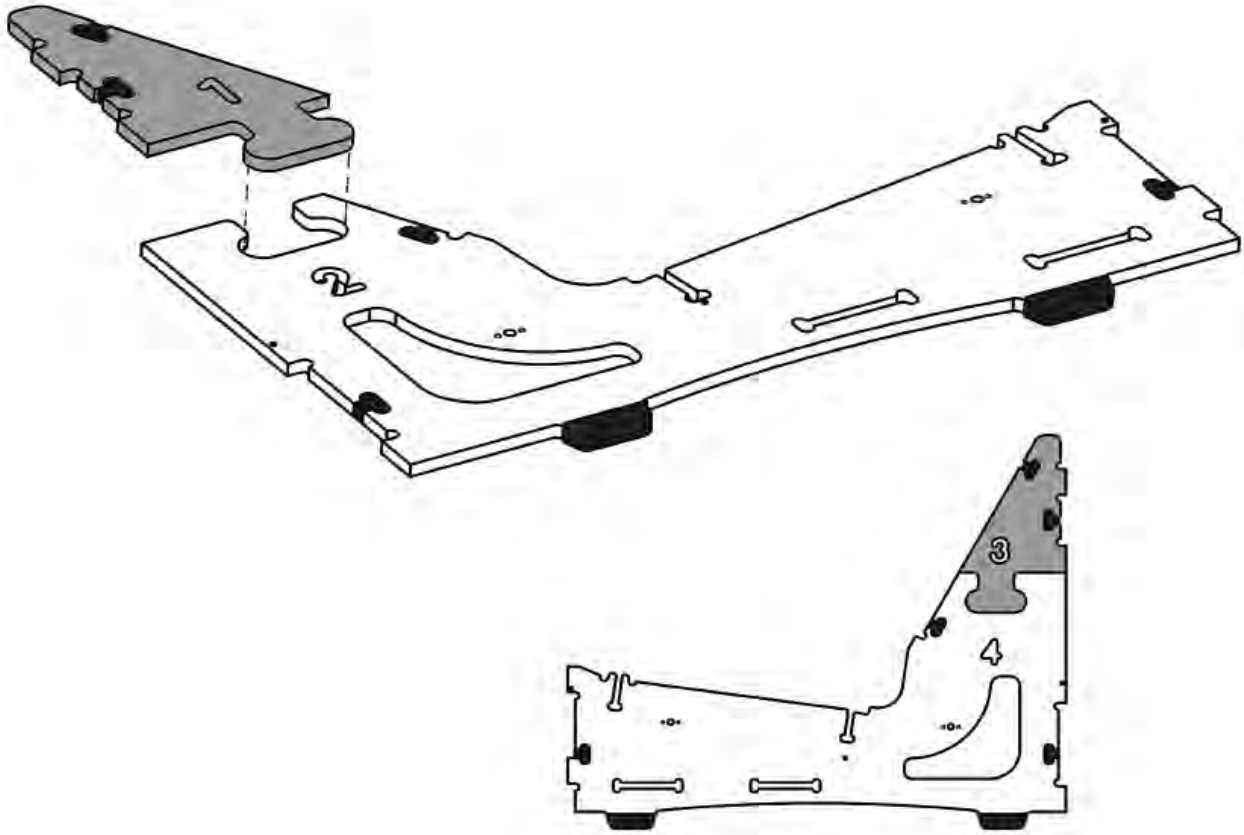

4 Slide part 5 onto part 2 and secure with two screws.

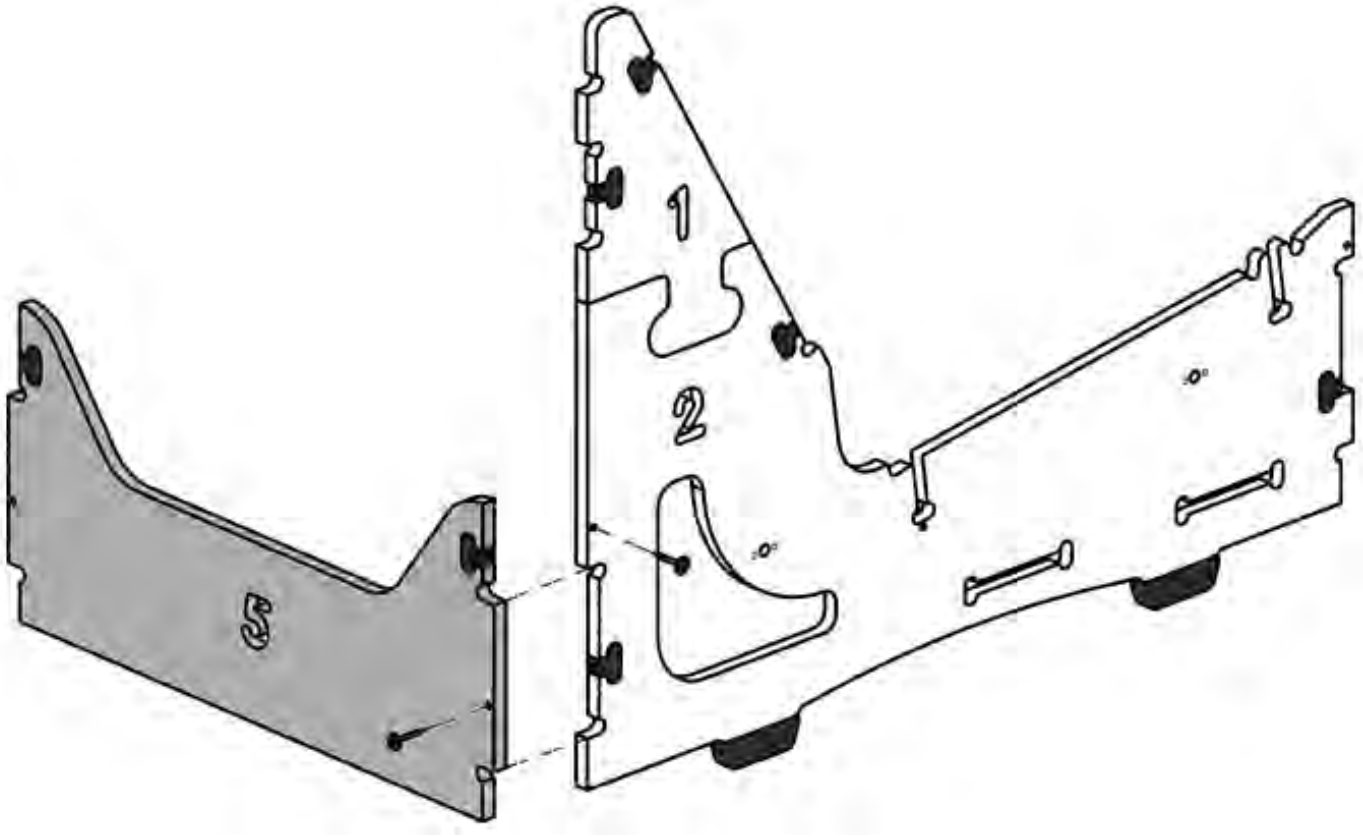

5 Slide part 4 onto part 5 and secure with two screws.

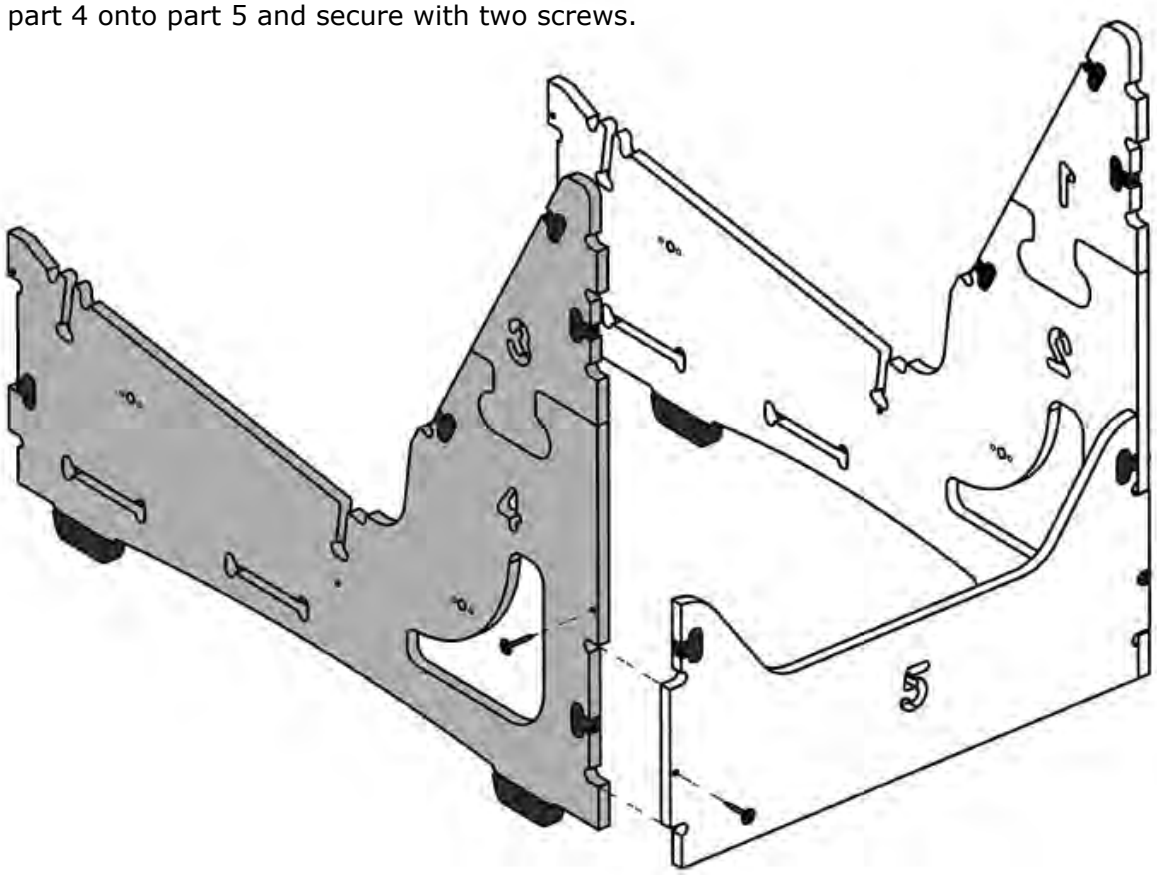

6 Spread parts 2 and 4 apart enough to slide part 6 into the slots on 2 and 4.

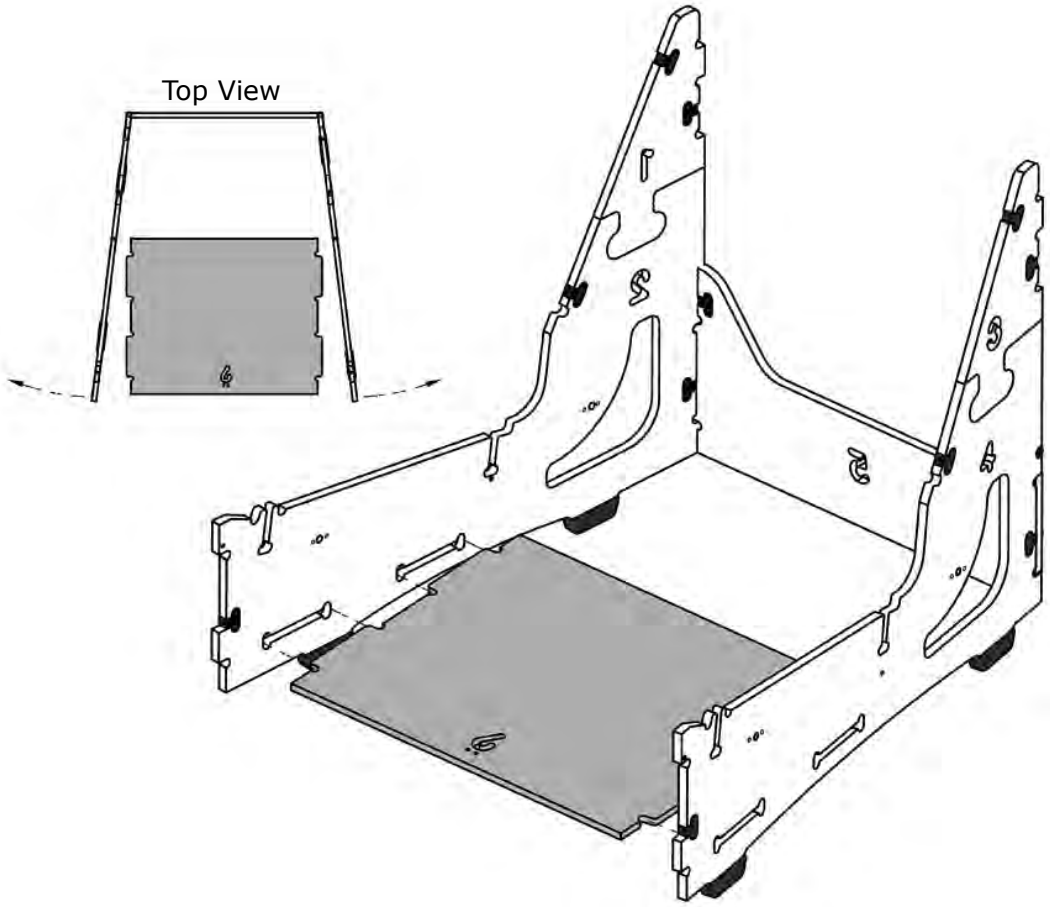

7 Slide part 7 onto parts 2 and 4. Secure with four screws.

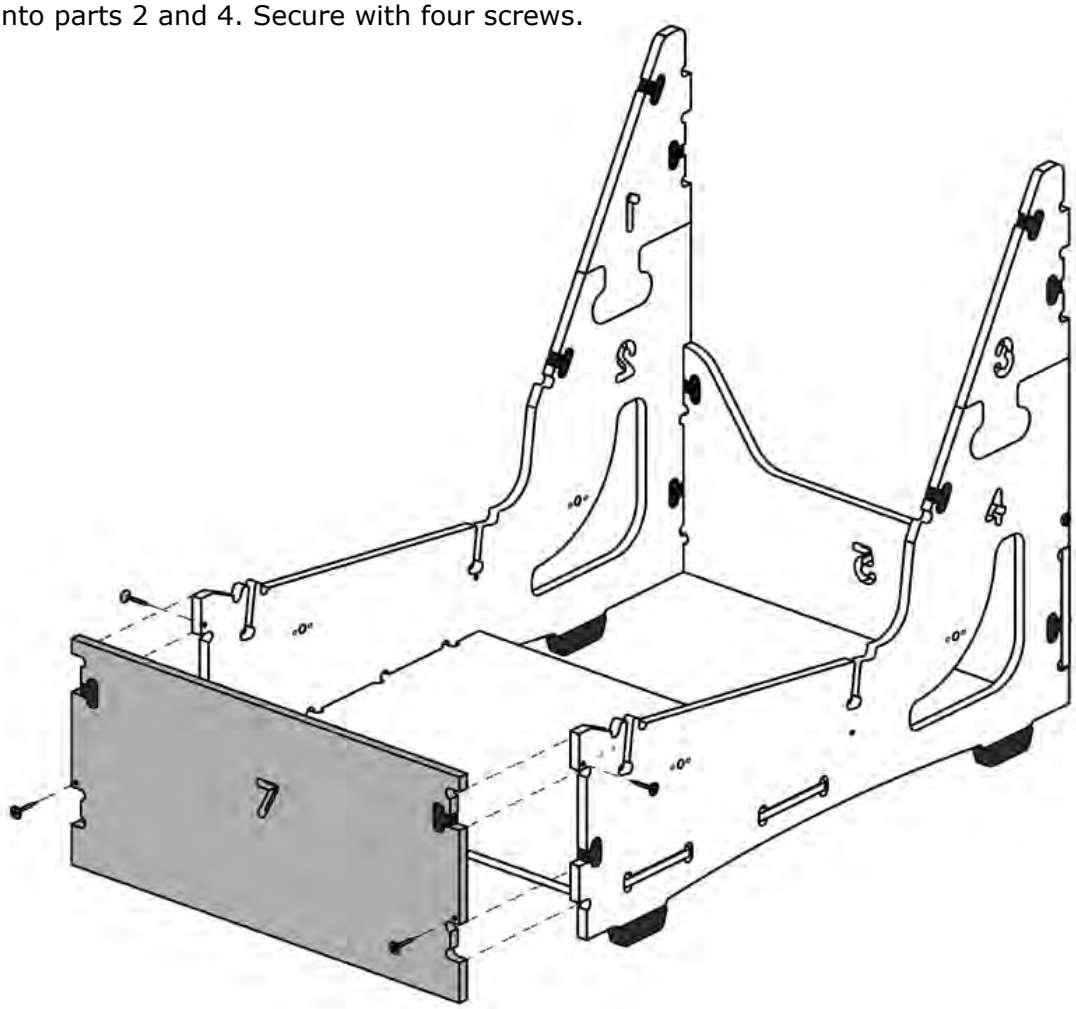

8 Place part 8 onto parts 1,2,3, and 4, then secure with four screws.

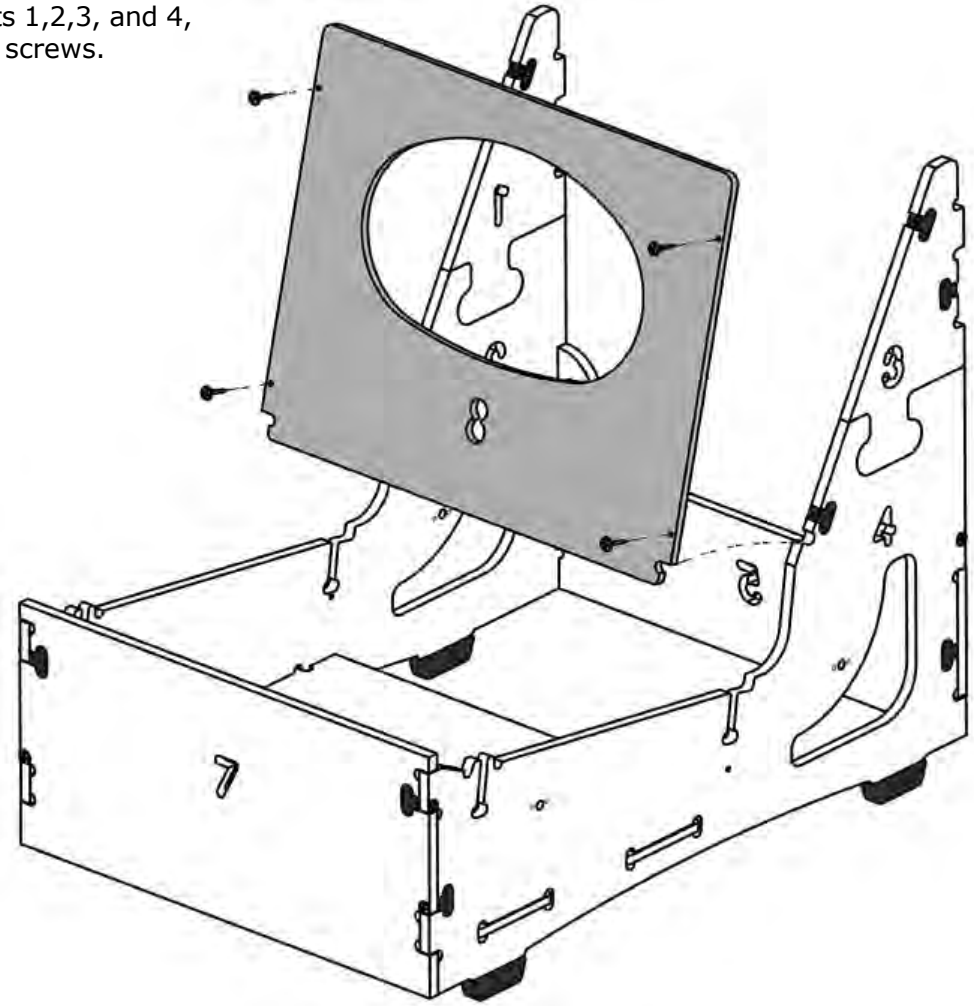

9 Place part 9 onto parts 1 and 3 and secure with two screws.

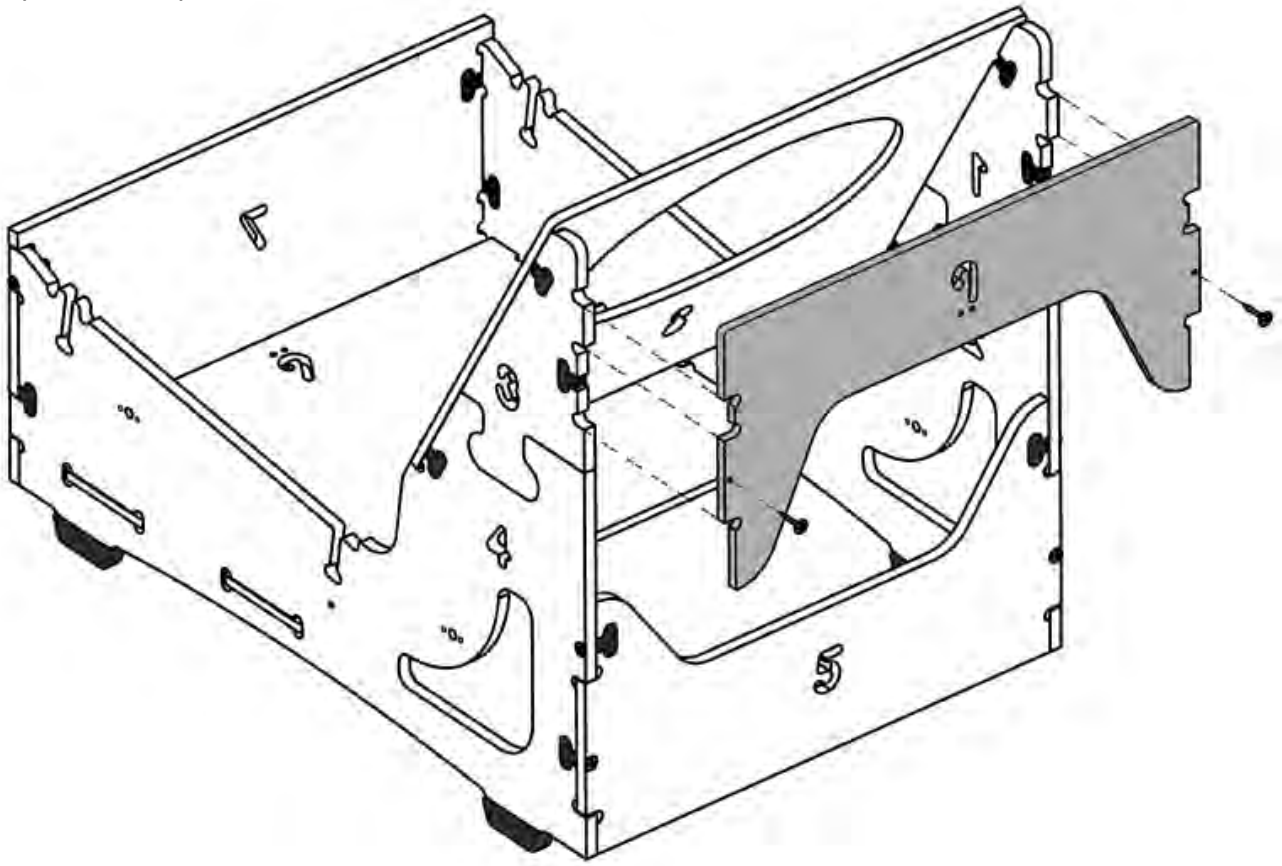

10 Slide part 10 into the back slots located on parts 2 and 4 and secure with two screws.

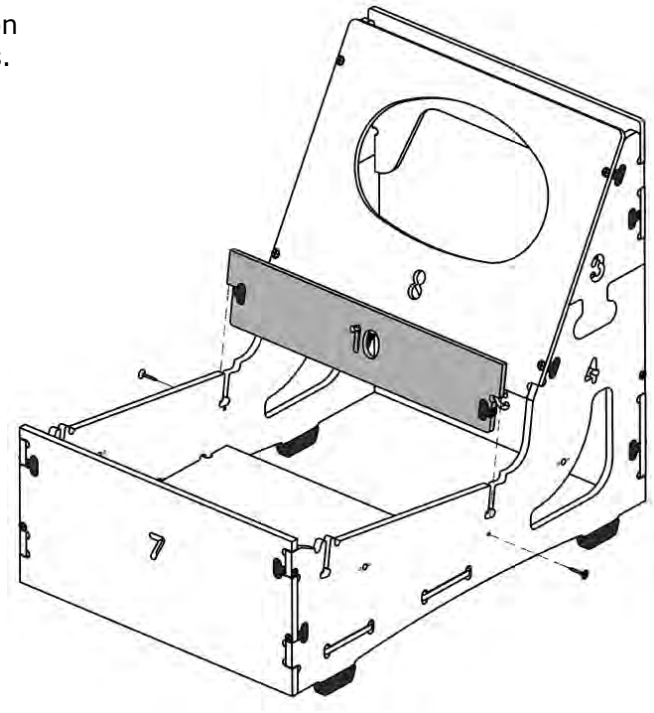

11 Slide part 11 into the front slots located on parts 2 and 4.

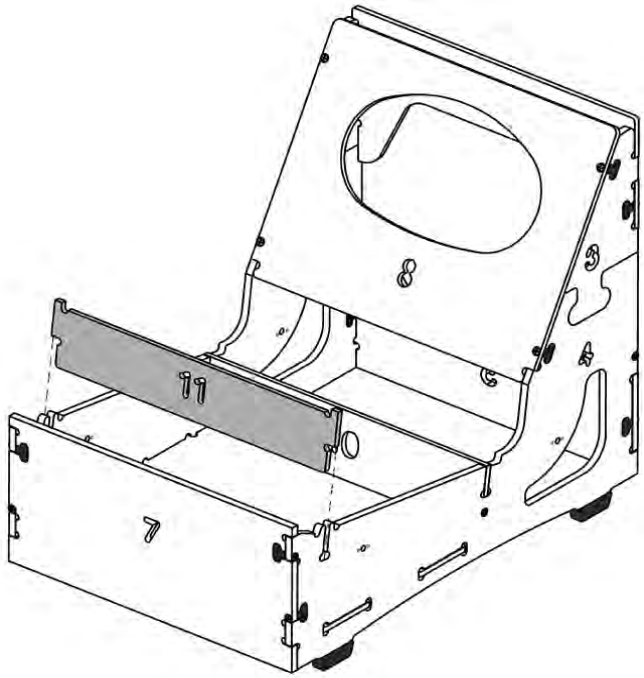

This completes the frame assembly. You will have wood pieces 12 and 13 remaining. They will be used later during fabric and foam assembly.

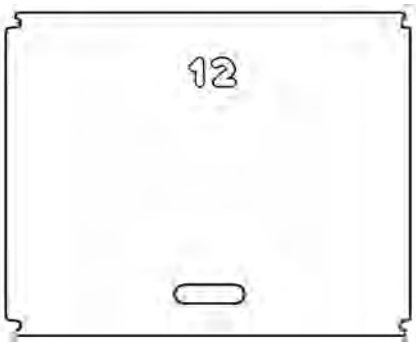

Fabric & Foam Assembly

Most of the fabric covers come inside out (it is the way they are sewn and protects the fabric surface in shipping). Unfold them all in preparation for assembly. To unfold a piece with a zipper, just pull the zipper apart as shown on the right.

You can snip off any hanging threads from the covers. They are left long during automatic trimming in the sewing process. Snipping them won't affect the strength of the seams.

Beauty tips: In addition to these printed instructions, you may want to watch our beauty tips videos on the customer service page of the website. The videos show demonstrations on how to apply the fabric covers and make them smooth and wrinkle free.

Fabrics

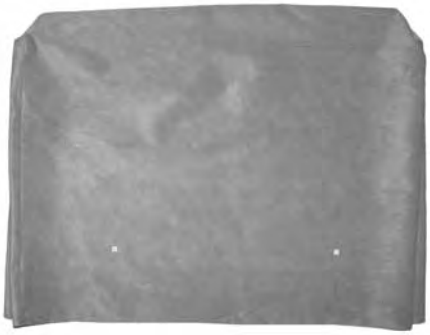

Arm Cover (1)

Seat Cushion Cover (1)

Back Cushion Cover (1)

Frame Back Cover (1)

Frame Front Cover (1)

Foam

Seat Cushion (1)

Top Rail (1)

Back Cushion (1)

Arm Foam (1)

1 Take the Top Rail and place it on top of the frame. Push it down into position between the front and back wood pieces.

2

Take the Frame Front Cover as shown above.

Insert wood piece 13 all the way into the sleeve.

Hold the wood firmly in place...

... and wrap the cover around the end of the wood...

... as you tuck the wood into the cover...

... on both ends.

3

Place the cover on the front of the frame...

... to form the front edge.

The wood piece fits onto the frame as shown.

Put the top corners of the cover in position...

... and then pull the bottom corners of the cover around the bottom of the wood frame as shown.

Repeat this process on the other side of the frame.

4

Take the Frame Back Cover and place it over the back of the frame as shown.

Pull the cover down, aligning the cover seams with the edge of the frame.

Wrap the cover around and under the back corner of the frame.

Repeat this process for the other side of the frame.

5

Position the Arm Foam onto the arm frame.

The bottom of the foam is recessed in order to fit onto the frame.

6

The Arm Covers will fit snuggly in the following sequence. The trick is to work the cover down the frame very gradually—inch by inch, as shown in the photos below—making equal progress on both sides.

Be sure to visit the beauty tips video page (www.homereserve.com/BeautyTips.cfm). You can see a demonstration of this process, and other tricks that will keep your furniture looking beautiful.

Take the Arm Cover...

... and place it over the foam and frame.

Align the seams with the edges of the wood arm frame and pull the cover down an inch or two...

Then, position the cover over the other end of the arm frame and work it down slightly...

Now that you have the cover positioned onto the frame at both sides, you can begin to work the cover all the way down...

... aligning the cover seams with the edges of the frame and alternately pulling each side so that neither one gets too far ahead of the other.

Once the Arm Cover is in place, smooth and straighten the fabric.

Flip the arm over to access the velcro attachments.

Starting with the flaps in the middle, draw the sides of the arm taut by pulling up on the fabric, folding the flaps over...

... and securing the velcro together.

Follow the same procedure for the flaps at both ends of the arm.

Complete the final step on the ends by folding over the front flap and securing the velcro.

Once the Arm Cover is in place, smooth the fabric. Reposition the velcro flaps on the bottom of the arm, if necessary, to remove any wrinkles.

7

In these next steps we'll be joining the arm to the frame with the connector bolts. See the diagram on the right.

There are holes for the connector bolts at the front and back of the frames as indicated by the arrows below.

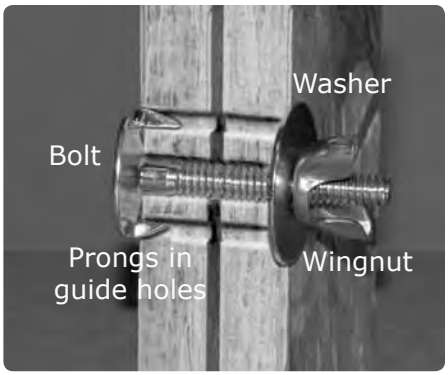

Connector Bolt

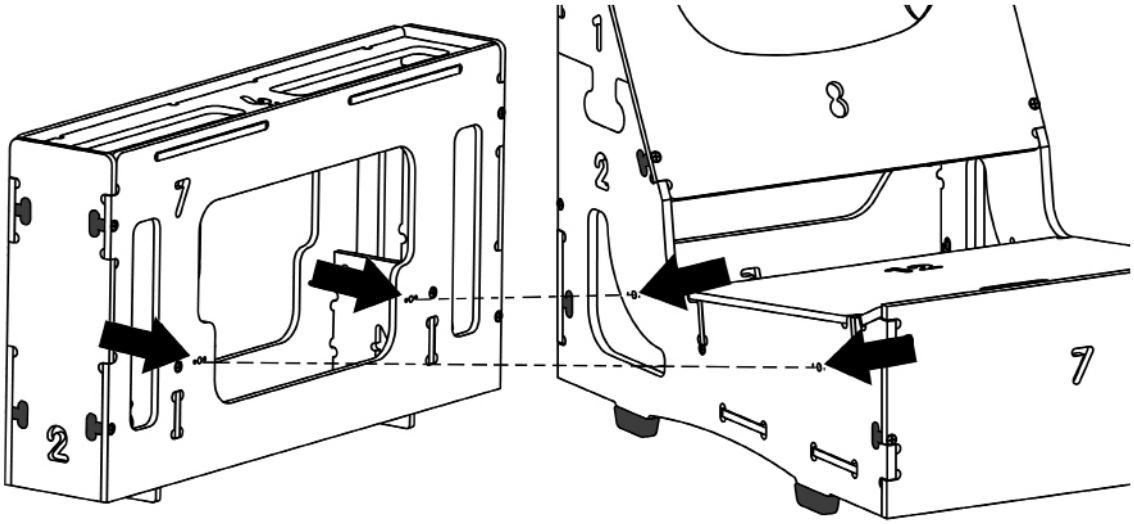

Tip the frame onto its back.

Now turn the arm over as well. Notice the holes in the arm fabric, and align them against the frame.

Follow the next steps to attach the connector bolt at the back of the frame (the hole closest to the floor with the frame on its back).

Reach inside the arm and insert the connector bolt into the hole.

The two prongs on the connector bolt go into the two small holes. This keeps the bolt from turning.

The arm is moved away from the frame in this photo to show how the connector bolt protrudes through the circular hole cut in the fabric.

With the arm pushed against the frame, insert the connector bolt through the frame as shown.

Take the washer and wingnut and get them started onto the bolt. Don’t tighten completely.

Now, move to the top of the frame and put the next connector bolt in place.

You may need to stand up and reach over the front rail in order to improve visibility and complete installation of the washer and wingnut.

Once the connector bolts are in position at both front and back, tighten the wingnuts to draw the frames together.

8

Take wood part 12 and place it into position as shown.

It is the lid of the storage compartment.

9

Find the Seat Cushion Cover and Seat Cushion Foam and follow the sequence below.

Match the rounded front edge of the Seat Cushion Foam with the rounded edge of the Seat Cushion Cover.

Position the cover over the foam and align the corners of the foam cushion with the corner seams of the cushion cover.

You can stick your hand inside to get everything smooth.

Working your way around the sides of the cushion, pull the corners of the cover onto the foam...

... and zip up the cover.

Place the seat cushion on the frame. The rounded edge of the cushion goes toward the front.

10

Find the Back Cushion Cover and the dacron-filled Back Cushion and follow the sequence below.

When filling the cover, match up the rounded corners of the Back Cushion with the rounded corners of the cover.

Push the filler into the cover. You can reach inside to fill out the corners.

Zip up the cover.

You can knead the cushion on the floor to straighten and smooth it.

You can further straighten and smooth the back cushion by striking it on the floor with several good whoops.

Change ends of the cushion and repeat.

This is also how to “fluff” the cushion in the future.

Place the back cushion on the frame.

Congratulations, assembly is complete.

Joining Your Sectional Group Together

Once you have all the individual pieces of your sectional group assembled, arrange them in the room according to your design plan. Then, starting at one end of the sectional arrangement, follow these instructions to secure all the units tightly together.

The frames will be joined together with the connector bolts. See the diagram on the right.

There are holes for the connector bolts at the front and back of the frames as indicated by the arrows below. Remove the storage lids to access these holes. Align the frames and slide the connectors into the holes. Tighten the wingnuts to draw the frames together.

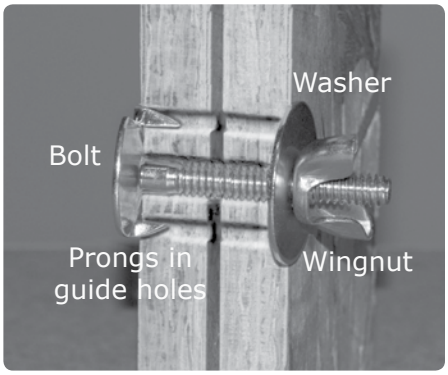

Connector Bolt

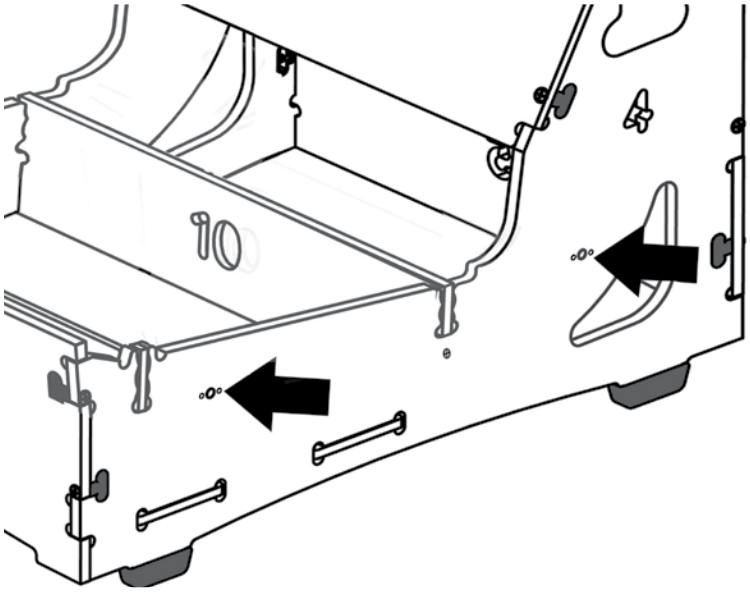

SEAT DEPTH ADJUSTMENT
The furniture is designed to allow for seat depth adjustments. The normal setting for the cushions to protrude is 1½” out in front of the frame. Slide the seat cushion in or out to adjust to your own seat depth preference.

REMEMBER
You can snip off any hanging threads from the covers. They are left long during automatic trimming in the sewing process. Snipping them won’t affect the strength of the seams.

Blank

HOME | RESERVE

Home Reserve products are
made in the USA under patents:
#6,267,446
#6,568,058
#6,981,747
#7,044,557
#7,523,989

Copyright ® Home Reserve, L.L.C. All Rights Reserved Worldwide. 08/2010